hidrive
MAKE CERTAIN

PEST CONTROL

Available for single, extra and dual cabs.

Government organisations responsible for biosecurity and pest control understand the critical need for compliant hazardous materials storage and easy access to essential tools, chemicals, and equipment. This durable and functional canopy is expertly engineered to address industry requirements, providing a reliable and well-organised workspace wherever you go. Its robust construction and thoughtful design ensure a practical and efficient environment, supporting your vital pest control operations with enhanced safety and effectiveness.

Features and benefits

+ The underbody rear roller drawer ensures secure storage for long items, with a lid that doubles as a practical work surface in the field, enhancing versatility and convenience.
+ The large bund tray fitted to the floor is ideal for storing liquids and chemicals. The 100mm sides effectively contain spills during transport or mixing, ensuring safe and compliant handling.
+ The full width door gives wide access to easily pull hoses and accessories through the rear, streamlining your workflow and improving operational efficiency.
+ Single key fob locks your vehicle and service body.

L2100 x W1850mm
Canopy

H900mm
Canopy

W1670mm
2 x Side Doors

W1240mm
Rear Door

S81569 Extra cab shown
With Underbody Rear Roller Drawer

**Specifications will change without notice. Before ordering, rely only on the quote document and any drawings made specifically for you.*

FEATURES & BENEFITS

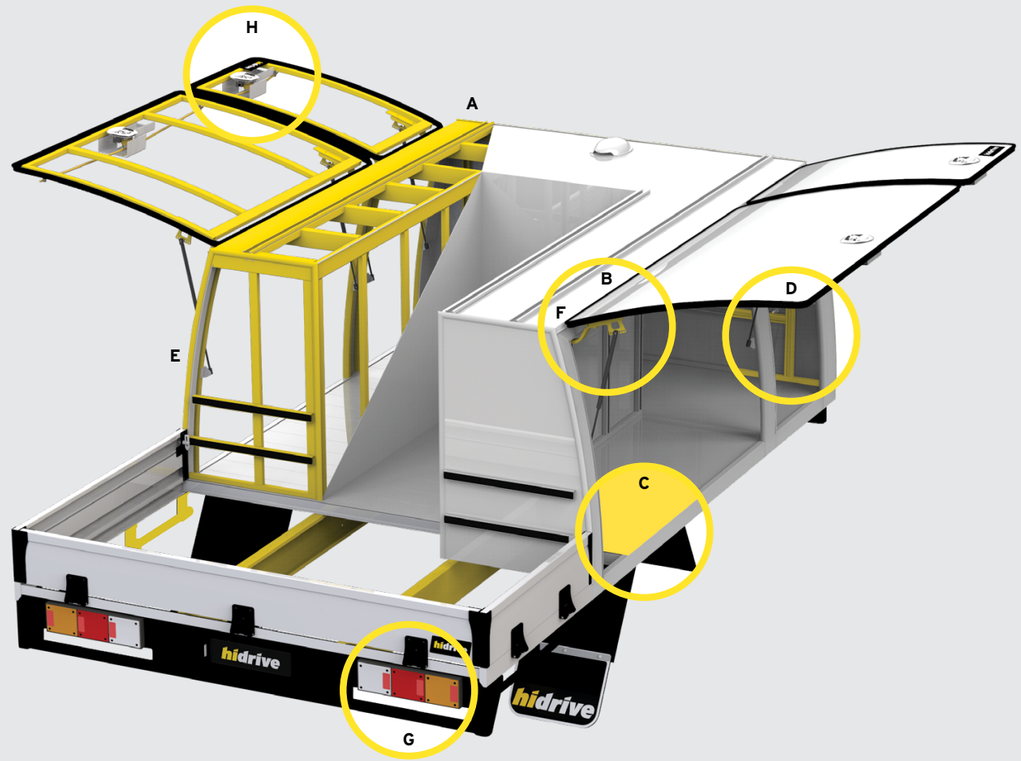

Truck Service Body shown.

(A) **Aluminium polymer co-bonded construction.** For the lightest possible weight, maximum vibration absorption, reliability and rust resistance.

(B) **Concealed dual action adjustable hinge.** Keeps moving parts out of the weather, provides world-class security and sealing at the top, bottom and sides.

(C) **Flush floor system.** Never jam your fingers against a floor lip again! Easier to unload, use sliders and drawers.

(D) **Internal, external & under tray integrated fixing tracks.** For easy accessory repositioning & avoiding the need to drill holes in your service body.

(E) **Contoured body.** A unique shape designed with modern vehicle aesthetics, aerodynamics and fuel efficiency in mind.

(F) **Sealed tight.** The door seal channels water away, helping keep your workspace dry while the door is open. And our positive sealing system seals against dust and water ingress when closed.

(G) **Removable tail light panel.** Easy to replace if damaged and superior to welded tail light panels which can be costly to replace. Get back on the road quicker after minor accidents.

(H) **Security.** Single rotating lock handle with hardened locking rods and stainless steel striking plates offers unrivalled strength and security, giving you peace of mind.

Hidrive doors are also more easily replaceable than flush mounted designs.

hidrive hidrive.com.au

TECHNICAL SPECIFICATIONS

BODY TYPE	Full Canopy	BUILD	S81569 Extra Cab
NAME	Pest Control Service Body	DOORS	3

CANOPY

- Canopy: L2100 x W1850 x H900 x R2100mm
- Aluminium co-bonded construction
- Door open seal system with adjustable tri-action concealed hinges
- Adjustable airflow vent fitted to roof front/centre
- Pull down door straps
- LED high mount stop light fitted top centre of rear door

COMPLIANCE

- Front/rear/axle weight compliance report (for registration and licensing authority in state of vehicle registration)
- Fitment declaration for ADR compliance
- Secure vehicle storage while in Hidrive care, custody and control, including 24/7 recorded CCTV
- Insurance for vehicle while in Hidrive care, custody and control (unless otherwise insured)

INCLUDED VARIATIONS

- Underbody rear roller drawer, L1920 x W670 x H130mm
- Full width rear door
- White 2K automotive paint (no additional charge)
- All ute brand colours available (request quote)

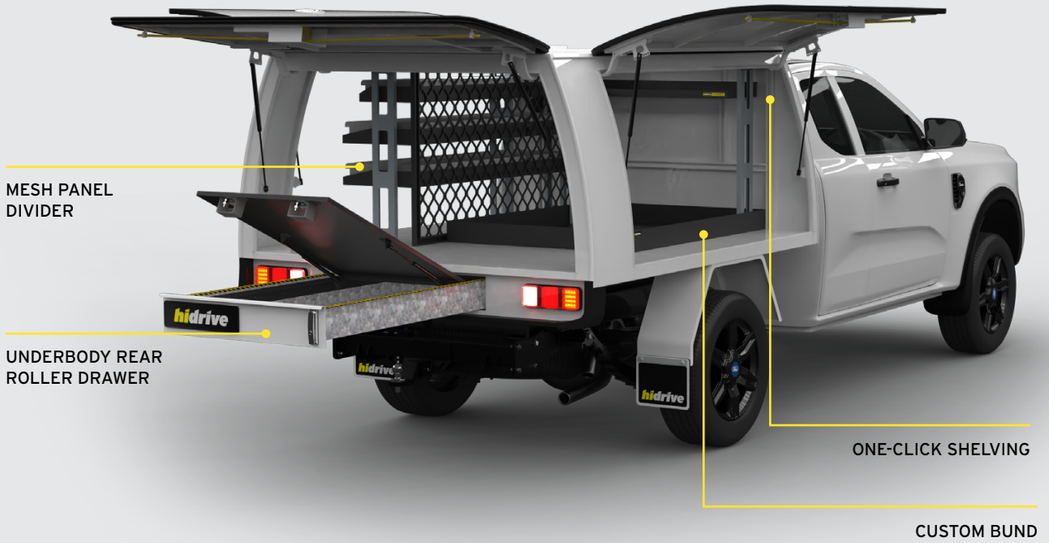

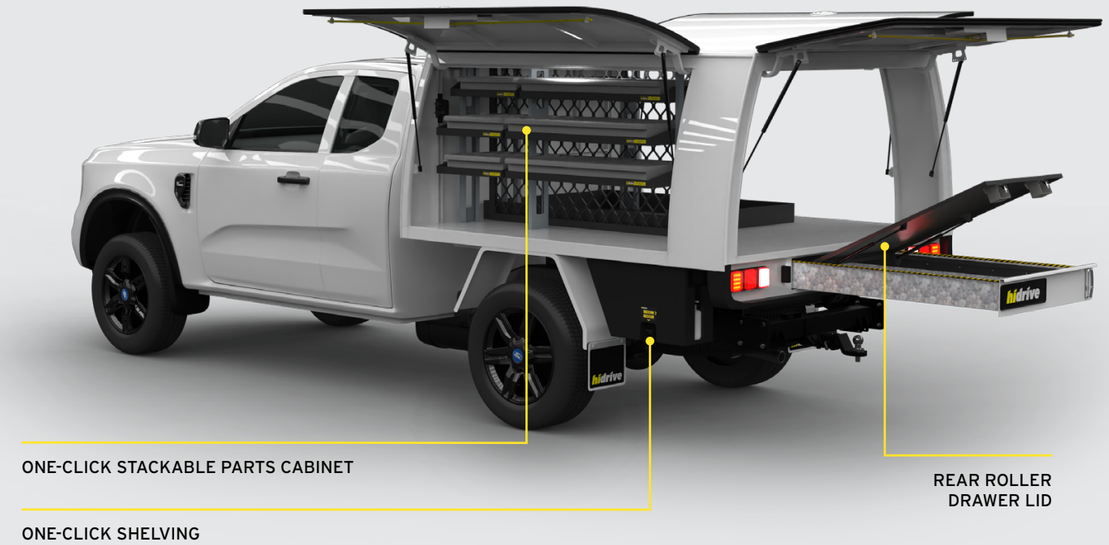

Images are for demonstration purposes only and may differ slightly from the final product.

INCLUDED ACCESSORIES

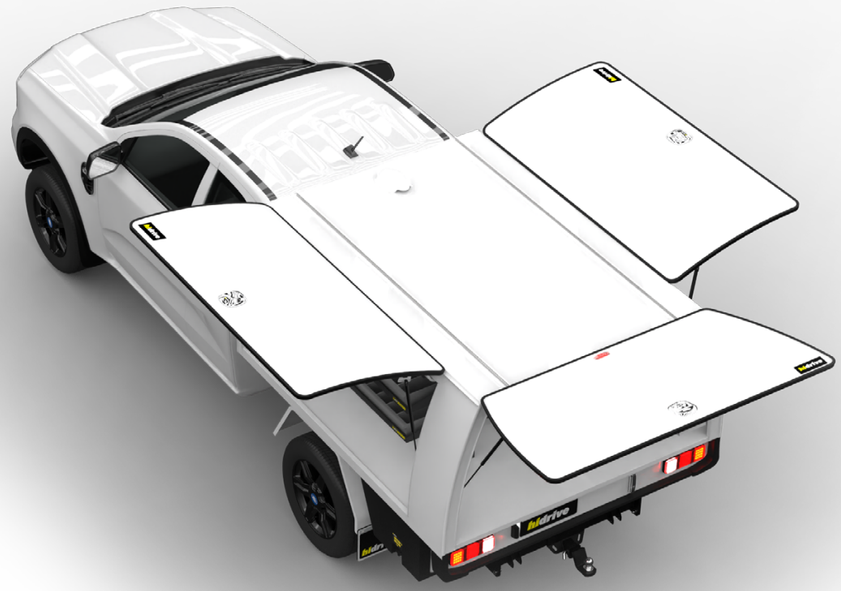

ACCESSORY GROUP	ACCESSORY	
INTERNAL STORAGE	One-Click shelf, 1475L x 900H, 2 bay with 460mm & 920mm shelves, 3 tier kit	VIEW ONLINE
	Divider, mesh panel, L1475 x H850mm	VIEW ONLINE
	Parts bins with removable dividers, 22 pce kit	VIEW ONLINE
UNDERBODY STORAGE & INFILL PANELS	Rear roller drawer lid, L1920mm	VIEW ONLINE
TOWING & BRAKE CONTROLS	Towbar, 3500kg rated	VIEW ONLINE
TANKS & BUNDS	Hand wash tank with soap dispenser, 30L	VIEW ONLINE
	Custom bunds, up to L1500L x W1200mm	VIEW ONLINE
CAMERAS & SENSORS	Reverse camera reposition, suits MY19-MY22 Ranger	VIEW ONLINE
SECURITY LOCKING & WARNING	Light, Lock & Go kit, 12V	VIEW ONLINE

OUR GOVERNMENT SECTOR RANGE

Along with our Pest Control build, we offer nine other service bodies for trades and applications specific to the government sector. Speak to our friendly team about the benefits of each build and get the right fleet for your needs.

MECHANIC

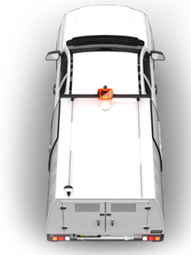

ANIMAL MANAGEMENT

CLEANER

ELECTRICAL

MAINTENANCE

PARKS & GARDENS

SURVEYOR

SERVICE TRUCK

ALL ROUNDER TRUCK

hidrive
MAKE CERTAIN

Chat with one of our helpful Mobile Workspace Specialists.

→ **1300 350 625**

→ team.aus@hidrive.com.au

→ hidrive.com.au

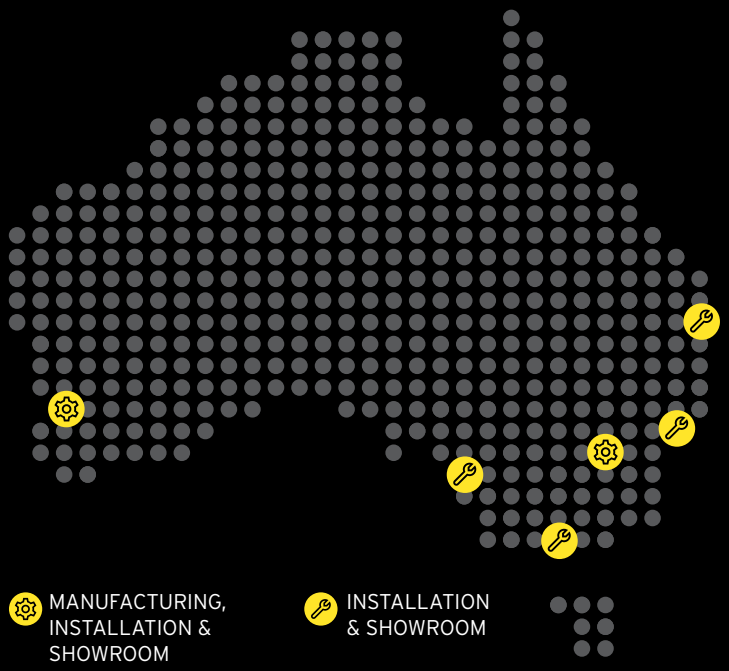

Hidrive is the only manufacturer of service bodies for utes, trailers and trucks with a company-owned national installation network.

COMPASS ASSURANCE SERVICES ISO 9001 · COMPASS ASSURANCE SERVICES ISO 14001 · COMPASS ASSURANCE SERVICES ISO 45001 · MADE HERE, FOR CERTAIN

© Hidrive October 2024. All rights reserved. Errors & omissions excluded. Hidrive reserves the right to change specifications and models without notice.

Eastern Manufacturing, Installation & Showroom
17 O'Sullivan Pl, Goulburn NSW 2580

Brisbane Showroom & Installation
146 Crockford St, Northgate QLD 4013

Melbourne Showroom & Installation
57 Hunter Rd, Derrimut VIC 3026

Western Manufacturing, Installation & Showroom
18 Catalano Rd, Canning Vale WA 6155

Sydney Showroom & Installation
18 Garner Pl, Ingleburn NSW 2565

Adelaide Showroom & Installation
6 Wirriga St, Regency Park SA 5010

2024-V1-10